USN. [ ][ ][ ][ ][ ][ ][ ][ ][ ][ ] [21CE53]

FIFTH SEMESTER B.Tech EXAMINATION, DECEMBER - 2023
QUANTITY SURVEYING, TENDERS AND CONTRACTS

Time:3 Hours **Maximum Marks:50**

Instructions:
- **i.** PART A- Question number 1 carrying 20 marks is compulsory.
- **ii.** PART B – 3 questions carry 30 Marks (10 marks each) with internal choice
- **iii.** Missing data may be suitably assumed.

PART A

1. Calculate a detailed estimate of quantities for the building of two rooms from the given drawing in Figure:1 for the following works using center line method. **20**

- **i.** Earthwork for excavation
- **ii.** Lime concrete for foundation
- **iii.** 1st Class Brick work in 1:4 cement mortar for foundation and plinth wall
- **iv.** 1st Class Brick work in super structure in 1:3 cement mortar.

All walls are of same section. Lintels over doors, windows and shelves are 0.18m thick.

Doors Dimensions – 1.1m X 2.0m

Windows Dimensions – 1.0m X 1.50m

Shelves Dimensions – 1.0m X 1.5m

2. Discuss the various earthwork methods. Explain any two methods used for calculation of earthwork quantities. **10**

OR

3. Estimate the quantity of earthwork for a portion of road from the following data. Length of chain is 30m. **10**

Chainage	0	1	2	3	4	5
GL	123.9	125.00	124.60	122.90	121.60	121.00
FL	123.20	123.60	124.00	123.60	123.20	122.80

Road width at formation surface is 10 m. Side slope is 2:1

4. Explain in detail the steps in tendering process. **10**

OR

5. Explain any five types of contracts. Discuss the common contract problems. **10**

6. Define Arbitration. Discuss the advantages and the process of arbitration. **10**

OR

7. What is meant by Value Engineering? Explain the phases in Value Engineering. **10**

TWO ROOMED BUILDING

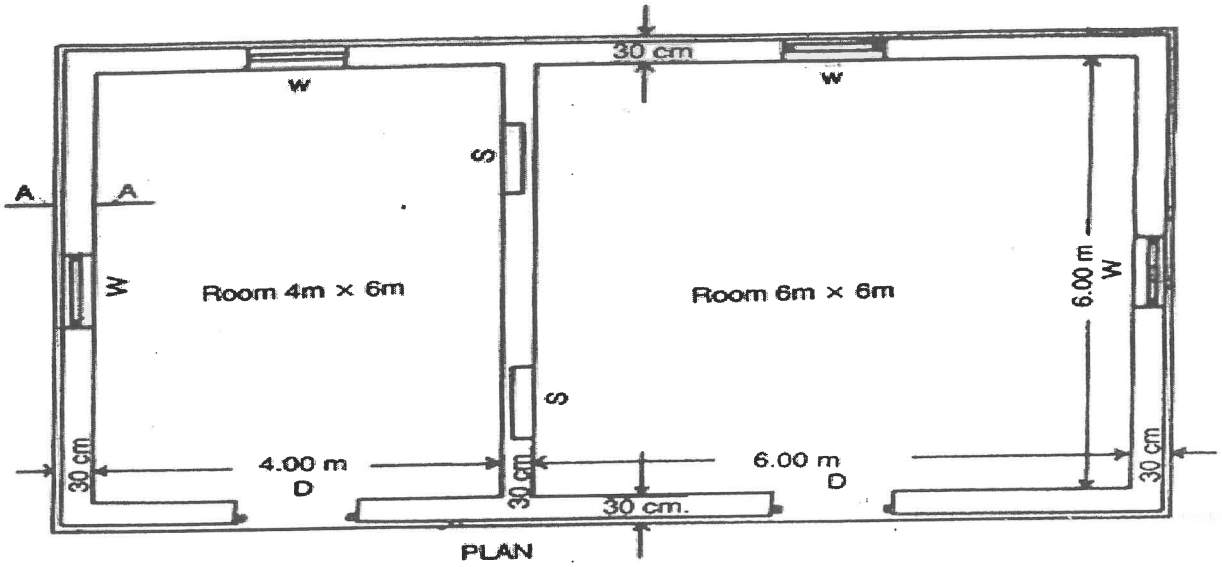

PLAN

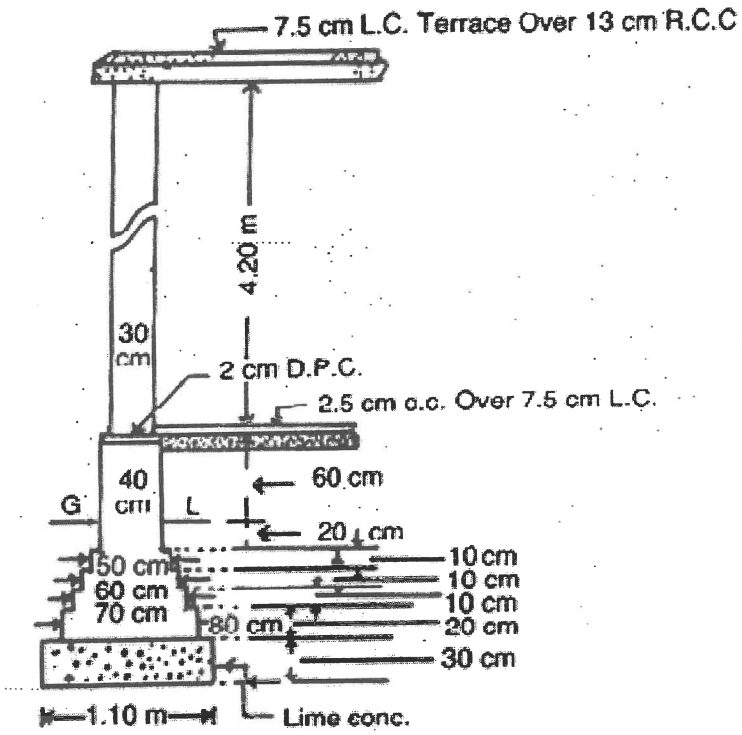

CROSS SECTION OF WALL ON AA.

Figure 1: Plan and Section of two roomed building